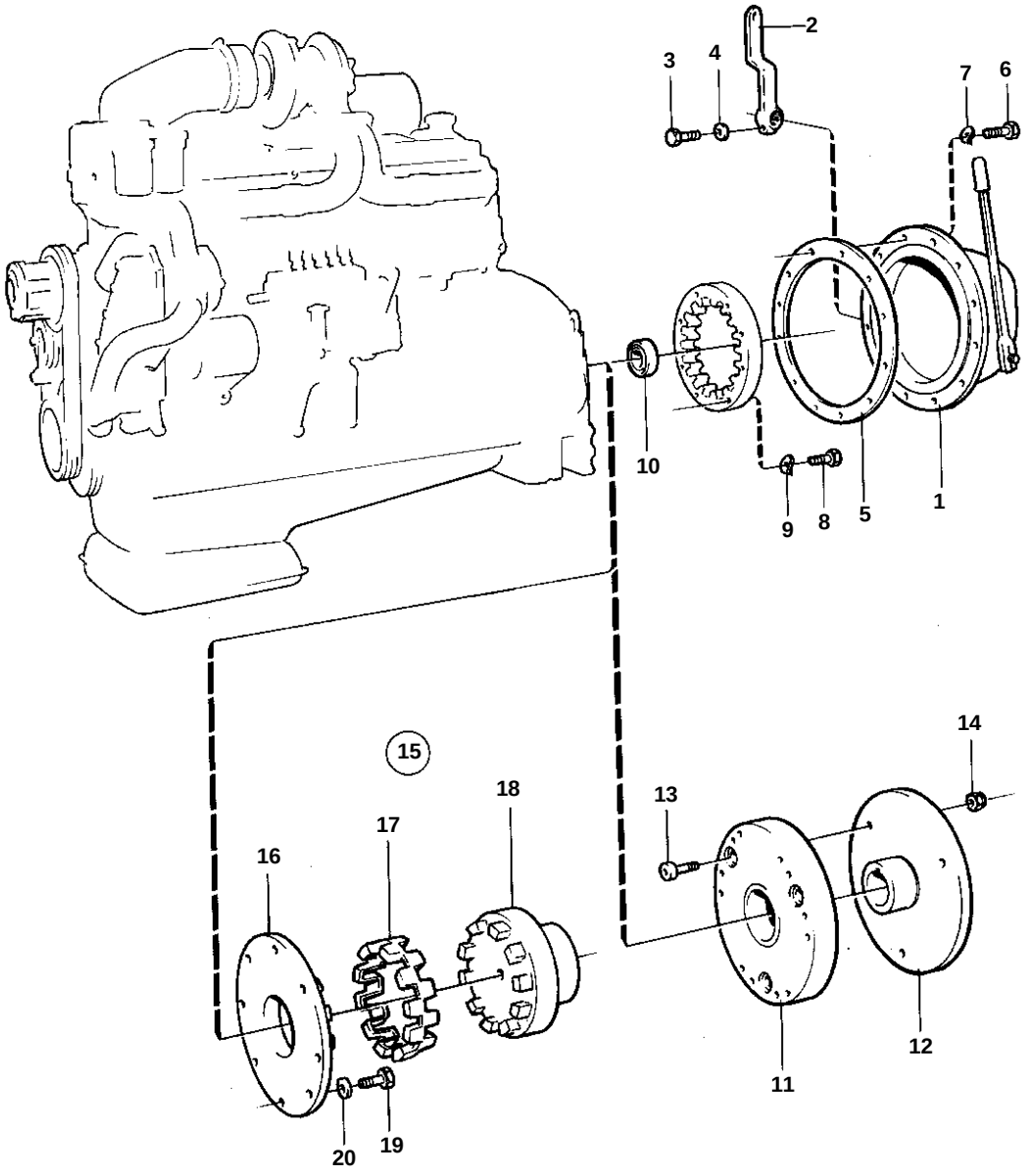

5957

REF	PART NO.	QTY	DESCRIPTION		SEE SEC.	NOTES
1	842520	1	Clutch			13" - BORG AND BECK 48445-80- PTIR.
					04D-0185	
	846107	1	Clutch			LATE TYPE-RUBBER ELEMENT BUSHING WITHOUT INT. THREAD.
					04D-0275	
	846730	1	Clutch			REPLACED BY 1EA 325249 BOLT, 2EA 325250 LOCK SPRING AND 2EA 325251 WASHER.
					04D-0200	
2	31143	1	Lever			ALT
3	959644	1	Screw			ALT
4	941908	1	Spring washer			ALT
6	940160	12	Screw			
7	941909	12	Spring washer			
8	955562	8	Screw			
9	940280	8	Spring washer			
10	847324	1	Ball bearing			TWIN DISC SP214P1 SER.31608.
	847323		Ball bearing			15" - BORG AND BECK 49914-38-PTIR.